Work Order ID 151658

646.9810 B151658 REV. A

151658

Wednesday, October 05, 2016 3:08:58 PM

Item ID: 646.9810 **Accept** *N9000040100* **Setup Start** *NS1*

Revision ID: **Stop** *NS2*

Item Name: Deflector

Start Date: 9/27/2016 **Start Qty:** 6.00 *6* **Cust Item ID:**

Required Date: 10/24/2016 **Req'd Qty:** 6.00 *6* **Customer:**

Reference:

Approvals: **Process Plan:** DAS 21 9-89 **Date:** OCT 0 6 2016 **Tooling:** _____ **Date:** _____ **Run Start** *NR1*

QC: _____ **Date:** _____ **SPC (Y/N):** _____ **Date:** _____ **Stop** *NR2*

Sequence ID/ Work Center ID	Operation Description	Set Up/ Run Hours	Tool ID	Tool #	Plan Code	Accept Qty	Reject Qty	Reject Number	Insp. Stamp
Draw Nbr / **Revision Nbr**									
646.9800 / A									
110	HAAS CNC VERTICAL MACHINING #1	0.20							DAS 33 9-89
110						6	0		10/11/03
HAAS 1	**Memo**	0.89							
HAAS CNC vertical machine #1	Billet size: 1.250" X 7.000" X 50.000"								
	1-Machine per folio FB162 DWG REV: AA FOLIO REV: A								
	2- deburr and break all sharp edges								
120	QC2- Inspect parts off machine FAI/FAIB	0.00							DAS 33 9-89
120						6	0		10/11/03
QC	**Memo**	0.01							
Quality Control									

DQA: _____ Date: _____

DART AEROSPACE

WORK ORDER NON-CONFORMANCE / UPDATE

QA Closed: Date: Work Order update only ☐

Work Order: _____

Part No. _____

NCR No.

DISPOSITION

Rework ☐
Scrap ☐
Use-as-is ☐
Suspected Unapproved ☐

AGAINST DEPARTMENT/PROCESS

Skid-tube	☐	Cross tube	☐	Water Jet	☐	Engineering	☐
Machining	☐	Small Fab	☐	Prod. Eng. Coor.	☐	Quality	☐
Thermoforming	☐	Finishing	☐	Rec/Store/Packaging	☐	Other	☐
Large Fab	☐	Composite	☐	Supplier	☐		☐

Date :	Step #:	QTY Effective :	MRB (QSI042) Approval

Description Work Order Deviation	Disposition	Completed By
		Lead hand / Supervisor Approval Verification
		QC / QA Coordinator Approval

Root Cause

Environment	☐	☐	No Re-verfication
Design	☐	☐	Operator
Doc/Data	☐	☐	Offset/Setup
Equip/Tooling	☐	☐	Supplier
Handling/Pre	☐	☐	Training
Material	☐	☐	Use for Testing
Internal Transport	☐	☐	Poor Information
Tribal Knowledge	☐	☐	Rushing
LOA	☐	☐	Product Improvement
Substation	☐	☐	Process Improvement
Past Expiry Date	☐	☐	Manufacturing Process
Misidentified	☐	☐	Past Due

FAULT CATEGORY

☐	Pressure/Forced	☐	Temperature/Cure	☐	Power Loss/Surge	☐	Positioned Wrong
☐	Bending	☐	Set-up	☐	Folio/Program	☐	Outside Dimensions
☐	Centre Not Concentric	☐	BOM/Route	☐	Grain	☐	Over/Under tolerance
☐	Cracks	☐	Broken/Damage/Defect	☐	Weld	☐	Part Incorrect
☐	Crimp/Kink/Ripple/Wave	☐	Inspection Incomplete/Unqualified	☐	Wrong Stock Pulled	☐	Part Lost/Missing
☐	Cuffs	☐	Contamination	☐	Out of Sequence	☐	Part Moved
☐	Crushing	☐	Countersink	☐	Off-set	☐	Drawing
☐	Heat Treat	☐	Cut Too Short	☐	Mislabeled	☐	Finish
☐	Wave/Twist in Tube	☐	Instructions Incomplete/Unclear	☐	Fit/Function	☐	Misread
☐	Marks/Chatter	☐	Drill Holes	☐	Misaligned/off center	☐	Turning Sequence

☐ OTHER :

Item ID: 646.9810 **Accept** *N9000040100* **Setup Start** *NS1*
Revision ID: **Stop** *NS2*
Item Name: Deflector
Start Date: 9/27/2016 **Start Qty:** 6.00 *6* **Cust Item ID:**
Required Date: 10/24/2016 **Req'd Qty:** 6.00 *6* **Customer:**
Reference:

Approvals: **Process Plan:** _____ **Date:** _____ **Tooling:** _____ **Date:** _____ **Run Start** *NR1*
QC: _____ **Date:** _____ **SPC (Y/N):** _____ **Date:** _____ **Stop** *NR2*

Sequence ID/ Work Center ID	Operation Description	Set Up/ Run Hours	Tool ID	Tool #	Plan Code	Accept Qty	Reject Qty	Reject Number	Insp. Stamp
130	QC8- Inspect parts - second check	0.00				6			DAS 9-9-16
130									
QC	**Memo**	0.02							
Quality Control									
140	Outsource process-Anodize per QSI017 4.1.10.1	0.00				6			DAS 9-9-16
140						NOV 14 2016			
Outsource4	**Memo**	179.99							
Outsource process - Anodize	Issue P/O to ATG : 34302								
	1- Black Anodize as per Dwg 646.9800								
	2- PRIME AS PER DWG, SEE NOTE #2								
	Certification of Comformity is required								
150	Receive & Inspect for Damage & Mat'l Certs	0.00				6			9/16-21
150									
Packaging	**Memo**	0.02							
Packaging									

DQA: _____ Date: _____

WORK ORDER NON-CONFORMANCE / UPDATE

DART AEROSPACE

QA Closed: Date: Work Order update only ☐

Work Order: _____

Part No. _____

NCR No.

DISPOSITION

Rework	☐
Scrap	☐
Use-as-is	☐
Suspected Unapproved	☐

AGAINST DEPARTMENT/PROCESS

Skid-tube	☐	Cross tube	☐	Water Jet	☐	Engineering	☐
Machining	☐	Small Fab	☐	Prod. Eng. Coor.	☐	Quality	☐
Thermoforming	☐	Finishing	☐	Rec/Store/Packaging	☐	Other	☐
Large Fab	☐	Composite	☐	Supplier	☐		

Date :	Step #:	QTY Effective :	MRB (QSI042) Approval

Description Work Order Deviation	Disposition	Completed By
		Lead hand / Supervisor Approval Verification
		QC / QA Coordinator Approval

Root Cause

Environment	☐	☐	No Re-verfication
Design	☐	☐	Operator
Doc/Data	☐	☐	Offset/Setup
Equip/Tooling	☐	☐	Supplier
Handling/Pre	☐	☐	Training
Material	☐	☐	Use for Testing
Internal Transport	☐	☐	Poor Information
Tribal Knowledge	☐	☐	Rushing
LOA	☐	☐	Product Improvement
Substation	☐	☐	Process Improvement
Past Expiry Date	☐	☐	Manufacturing Process
Misidentified	☐	☐	Past Due

FAULT CATEGORY

☐ Pressure/Forced	☐ Temperature/Cure	☐ Power Loss/Surge	☐ Positioned Wrong
☐ Bending	☐ Set-up	☐ Folio/Program	☐ Outside Dimensions
☐ Centre Not Concentric	☐ BOM/Route	☐ Grain	☐ Over/Under tolerance
☐ Cracks	☐ Broken/Damage/Defect	☐ Weld	☐ Part Incorrect
☐ Crimp/Kink/Ripple/Wave	☐ Inspection Incomplete/Unqualified	☐ Wrong Stock Pulled	☐ Part Lost/Missing
☐ Cuffs	☐ Contamination	☐ Out of Sequence	☐ Part Moved
☐ Crushing	☐ Countersink	☐ Off-set	☐ Drawing
☐ Heat Treat	☐ Cut Too Short	☐ Mislabeled	☐ Finish
☐ Wave/Twist in Tube	☐ Instructions Incomplete/Unclear	☐ Fit/Function	☐ Misread
☐ Marks/Chatter	☐ Drill Holes	☐ Misaligned/off center	☐ Turning Sequence

☐ OTHER :

Item ID: 646.9810 **Accept** *N900040100* **Setup Start** *NS1*
Revision ID: **Stop** *NS2*
Item Name: Deflector
Start Date: 9/27/2016 **Start Qty:** 6.00 *6* **Cust Item ID:**
Required Date: 10/24/2016 **Req'd Qty:** 6.00 *6* **Customer:**
Reference:

Approvals: **Process Plan:** _____ **Date:** _____ **Tooling:** _____ **Date:** _____ **Run Start** *NR1*
QC: _____ **Date:** _____ **SPC (Y/N):** _____ **Date:** _____ **Stop** *NR2*

Sequence ID/ Work Center ID	Operation Description	Set Up/ Run Hours	Tool ID	Tool #	Plan Code	Accept Qty	Reject Qty	Reject Number	Insp. Stamp
155	QC5- Inspect part completeness to step on W/O	0.00							DAS 38 DEC 15 2016
155 QC Quality Control	**Memo**	0.02				6			
180	Identify as per dwg & Stock Location: CC4041	0.00							
180 Packaging Packaging	**Memo** ***IDENTIFY AS PER APICAL MPP-120 BY STAMPING P# AND REV***	0.01				6		DEC 19 2016	DAS 6 9-89
190	QC21- Final Inspection - Work Order Release	0.00							DAS 21 9-89
190 QC Quality Control	**Memo**	0.10						DEC 19 2016	

DEC 19 2016

DQA: _____ Date: _____

WORK ORDER NON-CONFORMANCE / UPDATE

QA Closed: Date:

Work Order update only ☐

Work Order: _____

Part No. _____

NCR No.

DISPOSITION

Rework	☐
Scrap	☐
Use-as-is	☐
Suspected Unapproved	☐

AGAINST DEPARTMENT/PROCESS

Skid-tube	☐	Cross tube	☐	Water Jet	☐	Engineering	☐
Machining	☐	Small Fab	☐	Prod. Eng. Coor.	☐	Quality	☐
Thermoforming	☐	Finishing	☐	Rec/Store/Packaging	☐	Other	☐
Large Fab	☐	Composite	☐	Supplier	☐		☐

Date :	Step #:	QTY Effective :	MRB (QSI042) Approval

Description Work Order Deviation	Disposition	Completed By
		Lead hand / Supervisor Approval Verification
		QC / QA Coordinator Approval

Root Cause

Environment	☐	☐	No Re-verfication
Design	☐	☐	Operator
Doc/Data	☐	☐	Offset/Setup
Equip/Tooling	☐	☐	Supplier
Handling/Pre	☐	☐	Training
Material	☐	☐	Use for Testing
Internal Transport	☐	☐	Poor Information
Tribal Knowledge	☐	☐	Rushing
LOA	☐	☐	Product Improvement
Substation	☐	☐	Process Improvement
Past Expiry Date	☐	☐	Manufacturing Process
Misidentified	☐	☐	Past Due

FAULT CATEGORY

☐ Pressure/Forced	☐ Temperature/Cure	☐ Power Loss/Surge	☐ Positioned Wrong
☐ Bending	☐ Set-up	☐ Folio/Program	☐ Outside Dimensions
☐ Centre Not Concentric	☐ BOM/Route	☐ Grain	☐ Over/Under tolerance
☐ Cracks	☐ Broken/Damage/Defect	☐ Weld	☐ Part Incorrect
☐ Crimp/Kink/Ripple/Wave	☐ Inspection Incomplete/Unqualified	☐ Wrong Stock Pulled	☐ Part Lost/Missing
☐ Cuffs	☐ Contamination	☐ Out of Sequence	☐ Part Moved
☐ Crushing	☐ Countersink	☐ Off-set	☐ Drawing
☐ Heat Treat	☐ Cut Too Short	☐ Mislabeled	☐ Finish
☐ Wave/Twist in Tube	☐ Instructions Incomplete/Unclear	☐ Fit/Function	☐ Misread
☐ Marks/Chatter	☐ Drill Holes	☐ Misaligned/off center	☐ Turning Sequence

☐ OTHER :

Picklist Print

Wednesday, October 05, 2016 3:08:57 PM

Work Order ID: 151658 *151658*

Parent Item: 646.9810 *646 9810*

Parent Item Name: Deflector

Start Date: 9/27/2016 **Required Date:** 10/24/2016

Start Qty: 6.00 **Required Qty:** 6.00

Comments: IPP REV:A NEW ISSUE 13/04/01 JFS VERIFIED BY:DD

Component Item ID/ Item Name	Replacement Item ID	Mfg/ Purch	Bin Item	Primary Location	Last Location	Route Seq ID	Unit of Measure	Qty on Hand	Qty per Kit	Total Qty	Qty Issued	Date Issued	Status
M7075T6B1.250X07.000		Purchased	No				f	24.9999		24.996			

M7075T6B1.250X07.000

7075-T6 BAR 1.25" X 7.000" ORDER PRE CUT TO 50.00"

**

SL 16-10-27

Location	Loc Qty	Loc Code	
MAT007	24.9999		
m134261 x2	8.3333		8.3333
m135003 x4	16.6666		16.6666

DQA: _____ Date: _____

WORK ORDER NON-CONFORMANCE / UPDATE

DART AEROSPACE

QA Closed: Date: Work Order update only ☐

Work Order: _____

Part No. _____

NCR No.

DISPOSITION

Rework ☐
Scrap ☐
Use-as-is ☐
Suspected Unapproved ☐

AGAINST DEPARTMENT/PROCESS

Skid-tube	☐	Cross tube	☐	Water Jet	☐	Engineering	☐
Machining	☐	Small Fab	☐	Prod. Eng. Coor.	☐	Quality	☐
Thermoforming	☐	Finishing	☐	Rec/Store/Packaging	☐	Other	☐
Large Fab	☐	Composite	☐	Supplier	☐		

Date :	Step #:	QTY Effective :	MRB (QSI042) Approval

Description Work Order Deviation	Disposition	Completed By
		Lead hand / Supervisor Approval Verification
		QC / QA Coordinator Approval

Root Cause

Environment	☐	☐	No Re-verfication
Design	☐	☐	Operator
Doc/Data	☐	☐	Offset/Setup
Equip/Tooling	☐	☐	Supplier
Handling/Pre	☐	☐	Training
Material	☐	☐	Use for Testing
Internal Transport	☐	☐	Poor Information
Tribal Knowledge	☐	☐	Rushing
LOA	☐	☐	Product Improvement
Substation	☐	☐	Process Improvement
Past Expiry Date	☐	☐	Manufacturing Process
Misidentified	☐	☐	Past Due

FAULT CATEGORY

☐	Pressure/Forced	☐	Temperature/Cure	☐	Power Loss/Surge	☐	Positioned Wrong
☐	Bending	☐	Set-up	☐	Folio/Program	☐	Outside Dimensions
☐	Centre Not Concentric	☐	BOM/Route	☐	Grain	☐	Over/Under tolerance
☐	Cracks	☐	Broken/Damage/Defect	☐	Weld	☐	Part Incorrect
☐	Crimp/Kink/Ripple/Wave	☐	Inspection Incomplete/Unqualified	☐	Wrong Stock Pulled	☐	Part Lost/Missing
☐	Cuffs	☐	Contamination	☐	Out of Sequence	☐	Part Moved
☐	Crushing	☐	Countersink	☐	Off-set	☐	Drawing
☐	Heat Treat	☐	Cut Too Short	☐	Mislabeled	☐	Finish
☐	Wave/Twist in Tube	☐	Instructions Incomplete/Unclear	☐	Fit/Function	☐	Misread
☐	Marks/Chatter	☐	Drill Holes	☐	Misaligned/off center	☐	Turning Sequence

☐ OTHER :

DART AEROSPACE LTD	Work Order:	151658
Description: Deflector	Part Number:	646.9810
Inspection Dwg: 646.9800 **Rev:** A		Page 1 of 1

FIRST ARTICLE INSPECTION CHECKLIST

Drawing Dimension	Tolerance	Actual Dimension	Accept	Reject	Method of Inspection	Comments
Ø0.201	+0.005/-0.001	.201	✓		HJP-04	✓ VERA
40°	+/-0.5°	40°	✓		↓	↓
0.187	+/-0.010	.191	✓			
0.063 x 45°	+/-0.010 x +/-0.5°	0.063 x 45°	✓			
R0.125	+/-0.010	R.125	✓			
1.150	+/-0.010	1.151	✓			
0.340	+0.000/-0.005	0.337	✓			
0.800	+/-0.010	.800	✓			

Measured by:	DAS 33 9-89	Audited by:	DAS 49 9-89	Preliminary Approval:	
Date:	16/11/03	Date:	16-11-04	Date:	

Rev	Date	Change	Revised by	Approved
A	14.06.25	New Issue	KJ	

APICAL
INDUSTRIES, INC.

ENGINEERING CHANGE NOTICE NO. 03828				SHEET 1 OF 8
DWG NO. 646.9800	REV: NC	PREPARED BY: B. PETERS	DATE: 03/19/13	EFFECT ON DWG ☒ INC. ☐ UNINC.
DWG TITLE: DEFLECTOR				
APPROVED BY: ENGR		MFG David Barber	QC	EFF: NEXT ORDER
TRANSACTION CODES (TC): A-ADD C-CREATE R-REVISE D-DELETE	REASON: REVISED CORNER RADIUS, TOLERANCES, AND ADDED INSPECTION DIMENSIONS.			ECR: D-13-029

SHEET 1, ZONE A5-A6 & B5-B6 WAS:

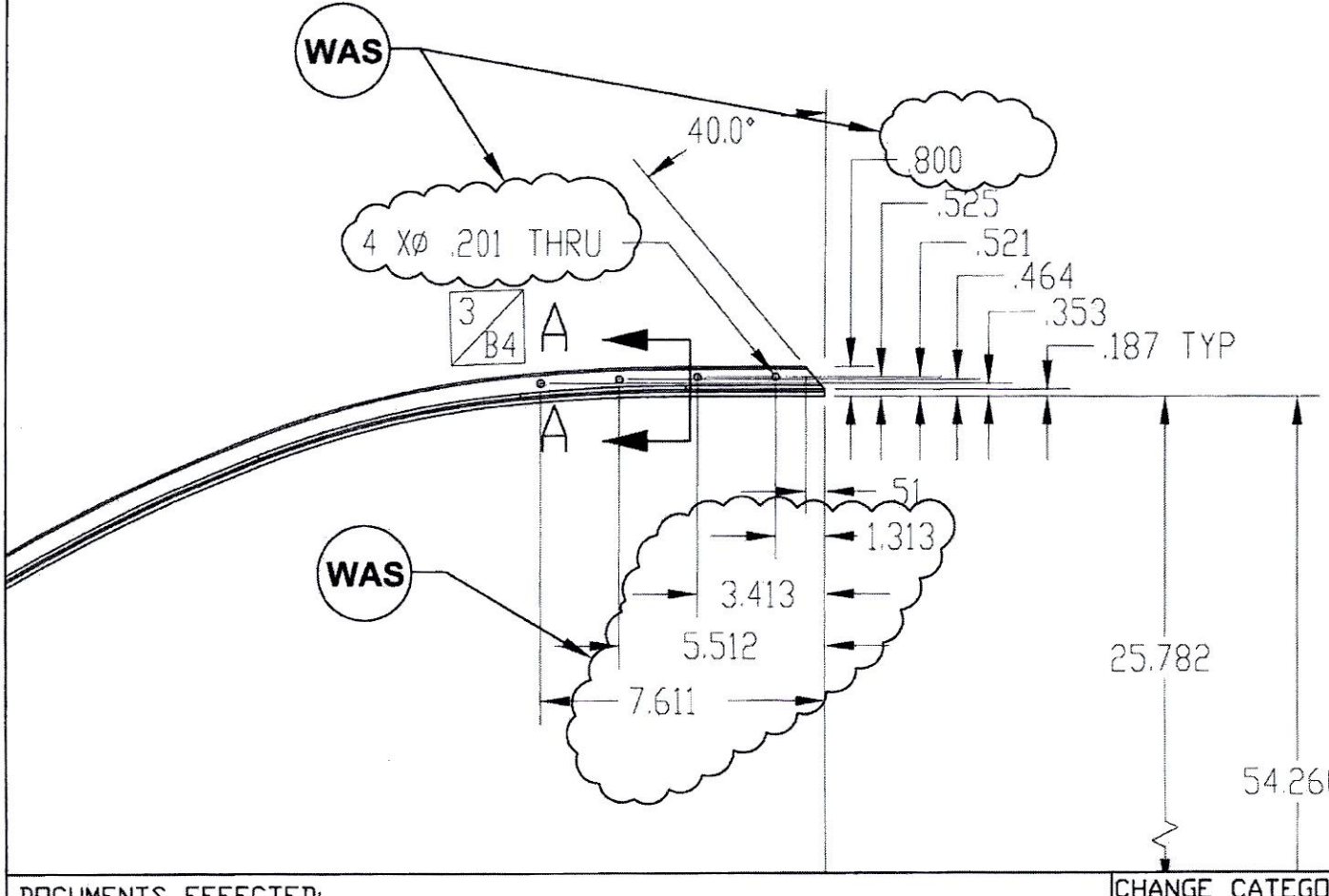

SHOP COPY
RETURN TO
ENGINEERING
UNCONTROLLED COPY
SUBJECT TO AMENDMENT
WITHOUT NOTICE
WORK ORDER
NO. 151658 MCJ
16-10-06

DOCUMENTS EFFECTED: ☐ MDL ☐ INSTALL INSTRUC ☐ ICA ☐ BOM	CHANGE CATEGORY ☐ MAJOR ☒ MINOR	DER REVIEW REQUIRED ☐ YES ☒ NO	

SHEET 3, ZONE A4 & A5 WAS:

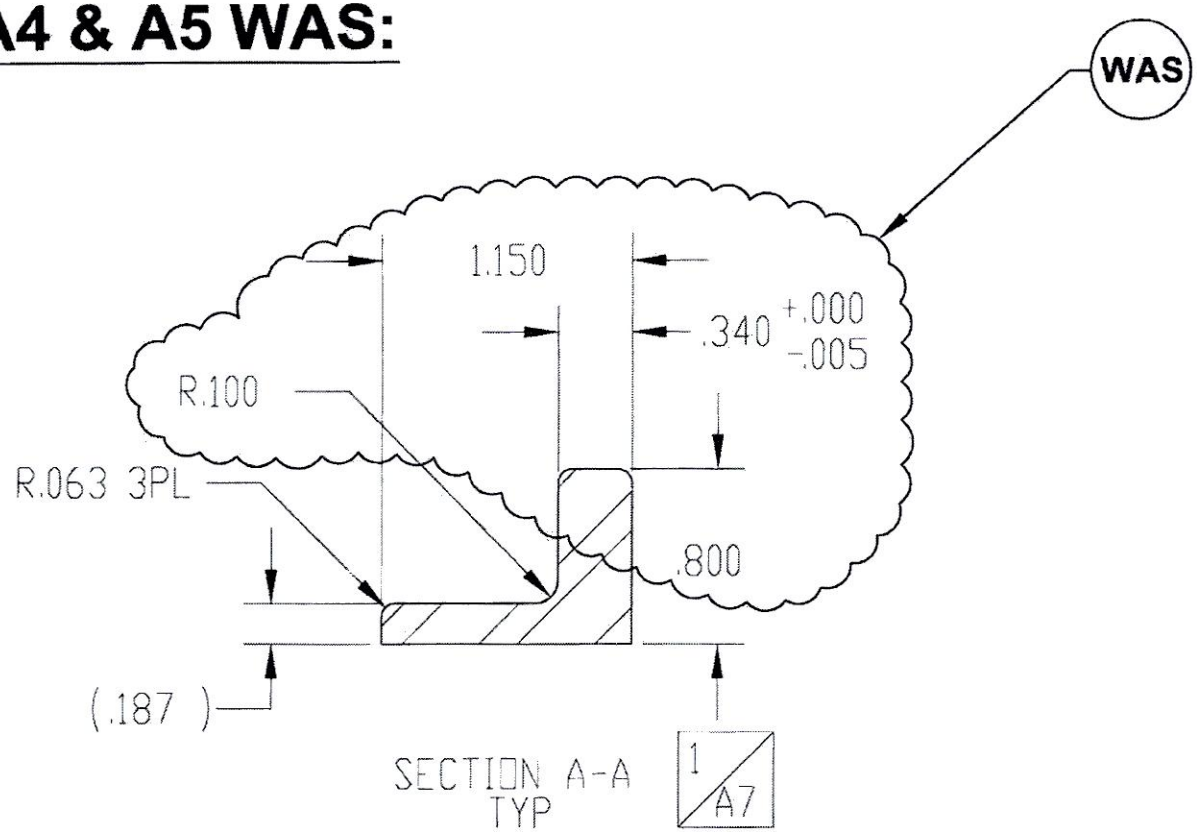

SHEET 4, WAS:

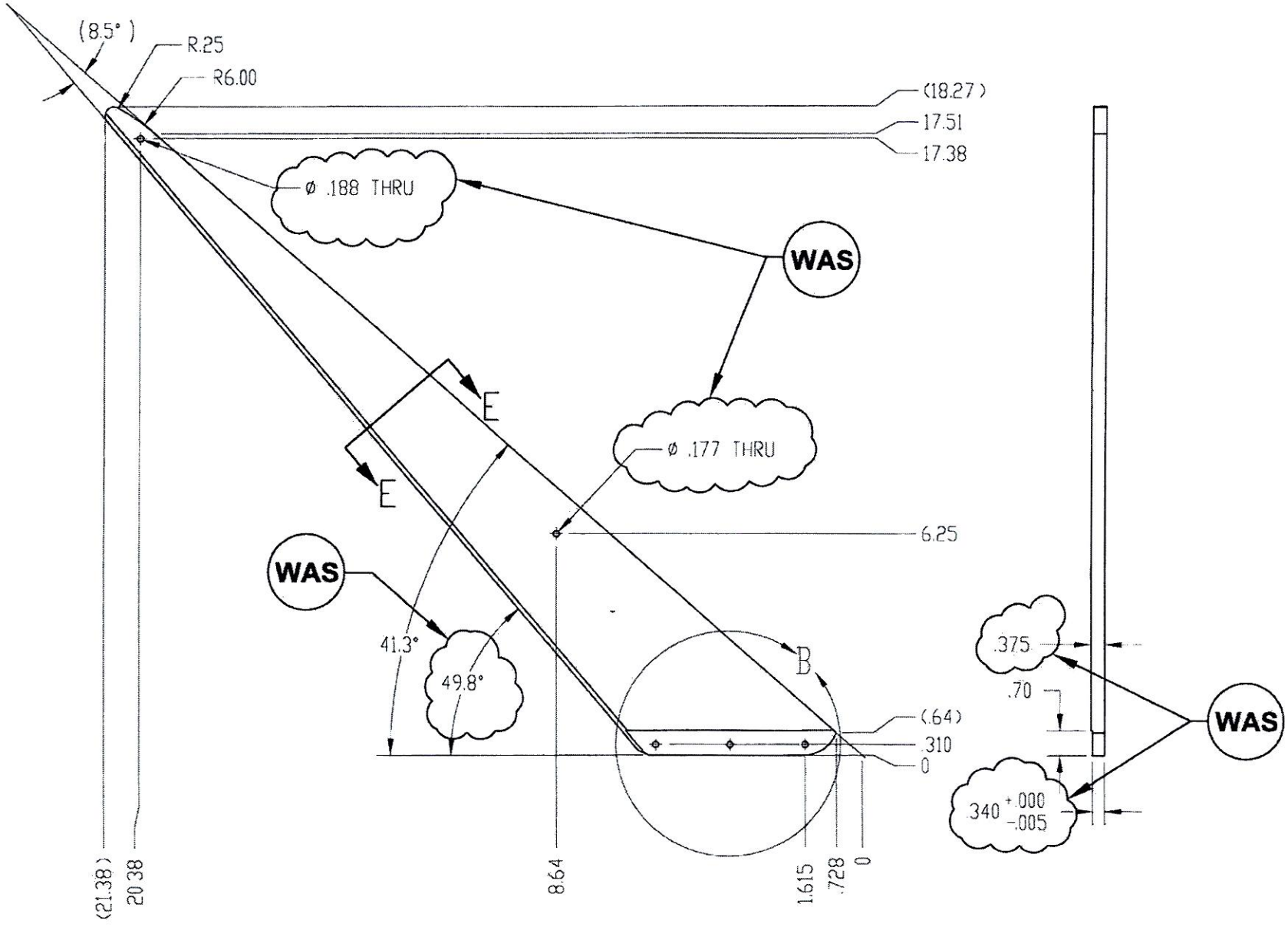
(8.5°)
R.25
R6.00
(18.27)
17.51
17.38
Ø .188 THRU
WAS
E
E
Ø .177 THRU
6.25
WAS
41.3°
49.8°
B
(.64)
.310
0
.375
.70
WAS
.340 +.000 -.005
(21.38)
20.38
8.64
1.615
.728
0

SHEET 4, ZONE C7 & C8 WAS:

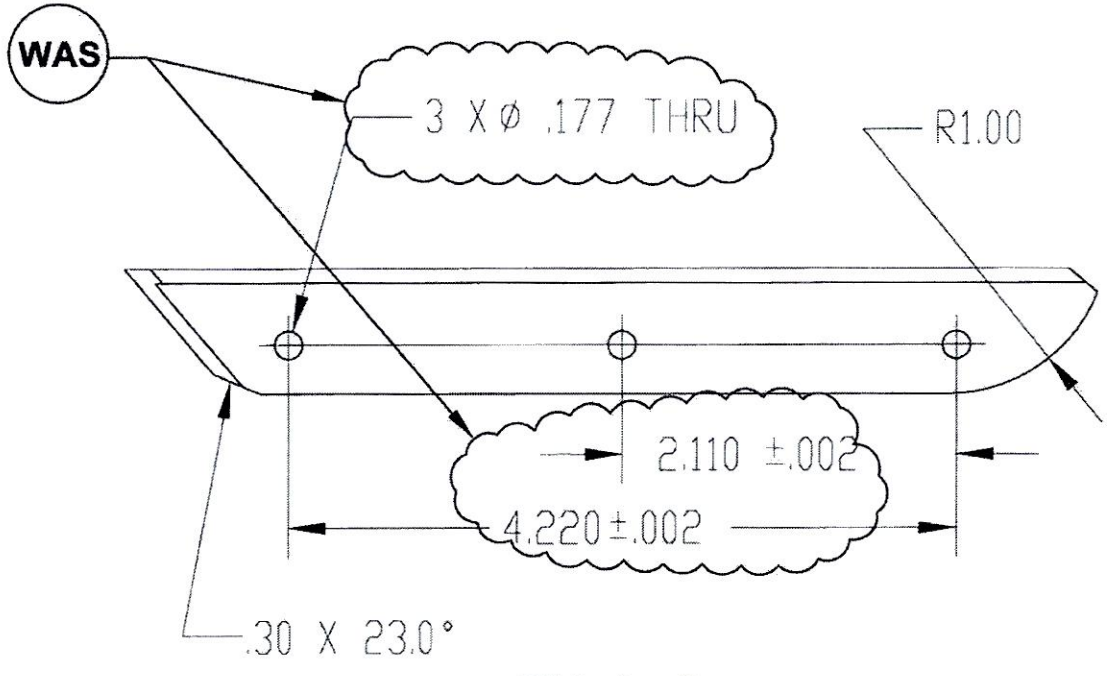

DETAIL B

SHEET 5, WAS:

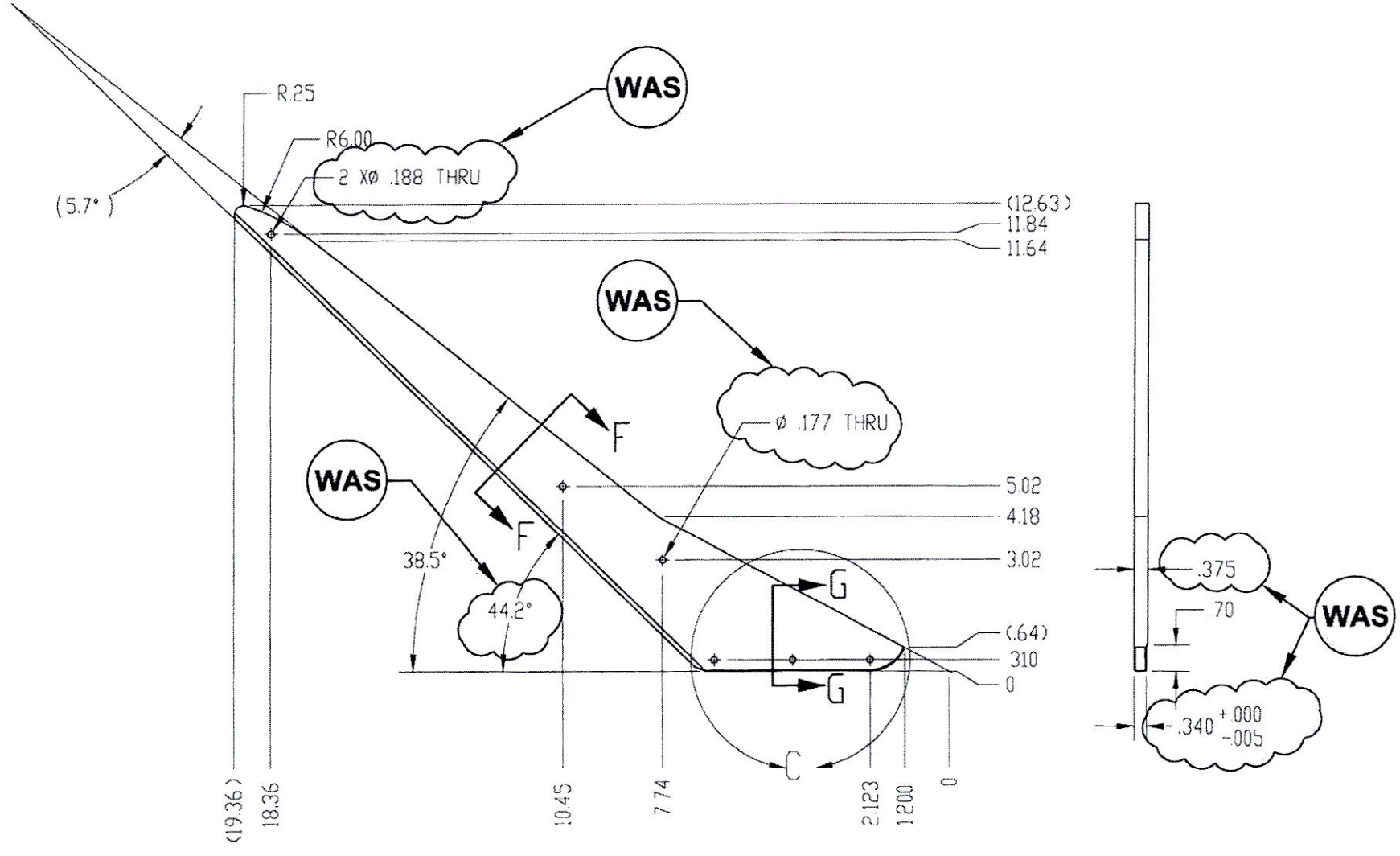
WAS
R.25
R6.00
2 XØ .188 THRU
(5.7°)
(12.63)
11.84
11.64
WAS
Ø .177 THRU
F
F
WAS
38.5°
44.2°
5.02
4.18
3.02
G
G
(.64)
.310
0
C
(19.36)
18.36
10.45
7.74
2.123
1.200
0
.375
.70
WAS
.340 +.000 -.005

SHEET 5, ZONE C8, D7, & D8 WAS:

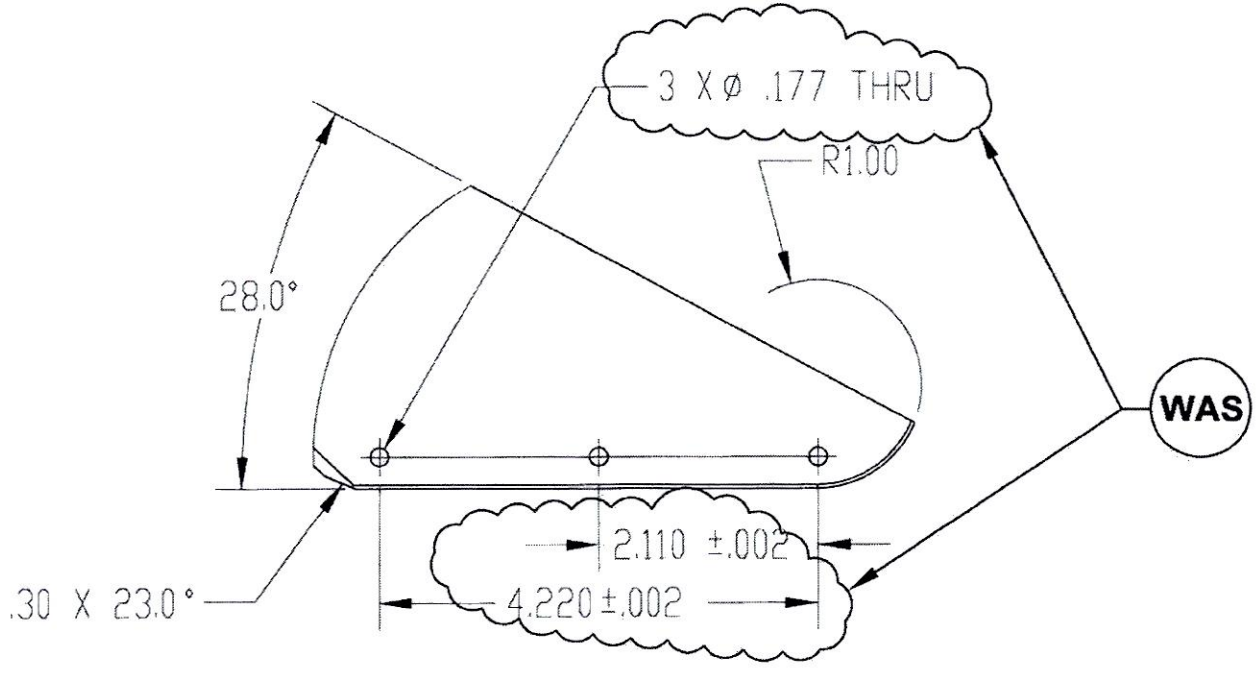

DETAIL C

SHEET 6, WAS:

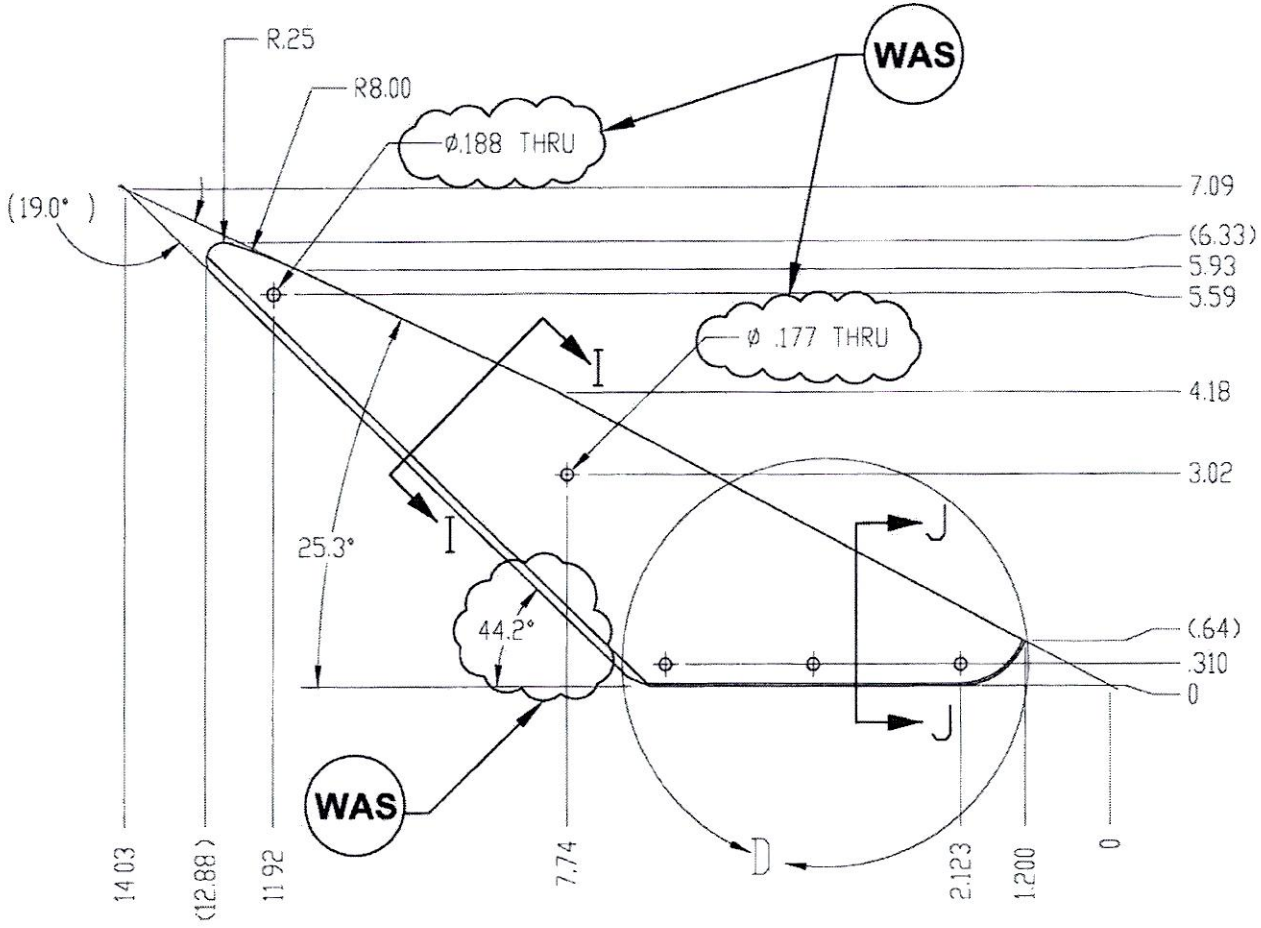
R.25
R8.00
WAS
ø.188 THRU
(19.0°)
7.09
(6.33)
5.93
5.59
ø .177 THRU
I
4.18
3.02
25.3°
I
J
44.2°
(.64)
.310
0
J
WAS
D
14.03
(12.88)
11.92
7.74
2.123
1.200
0

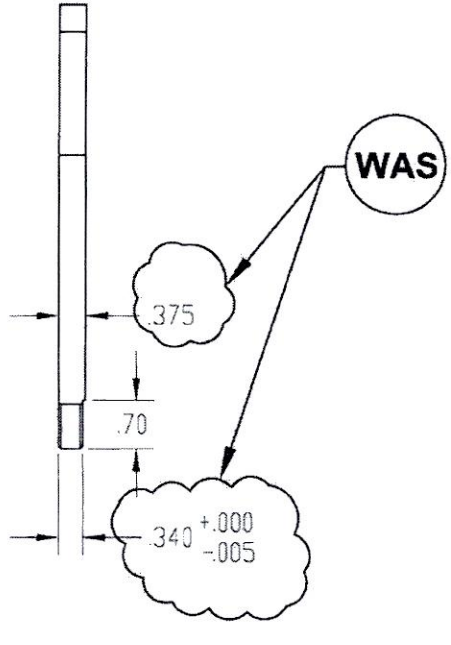
WAS
.375
.70
.340 +.000 -.005

SHEET 6, ZONE C6 & D6 WAS:

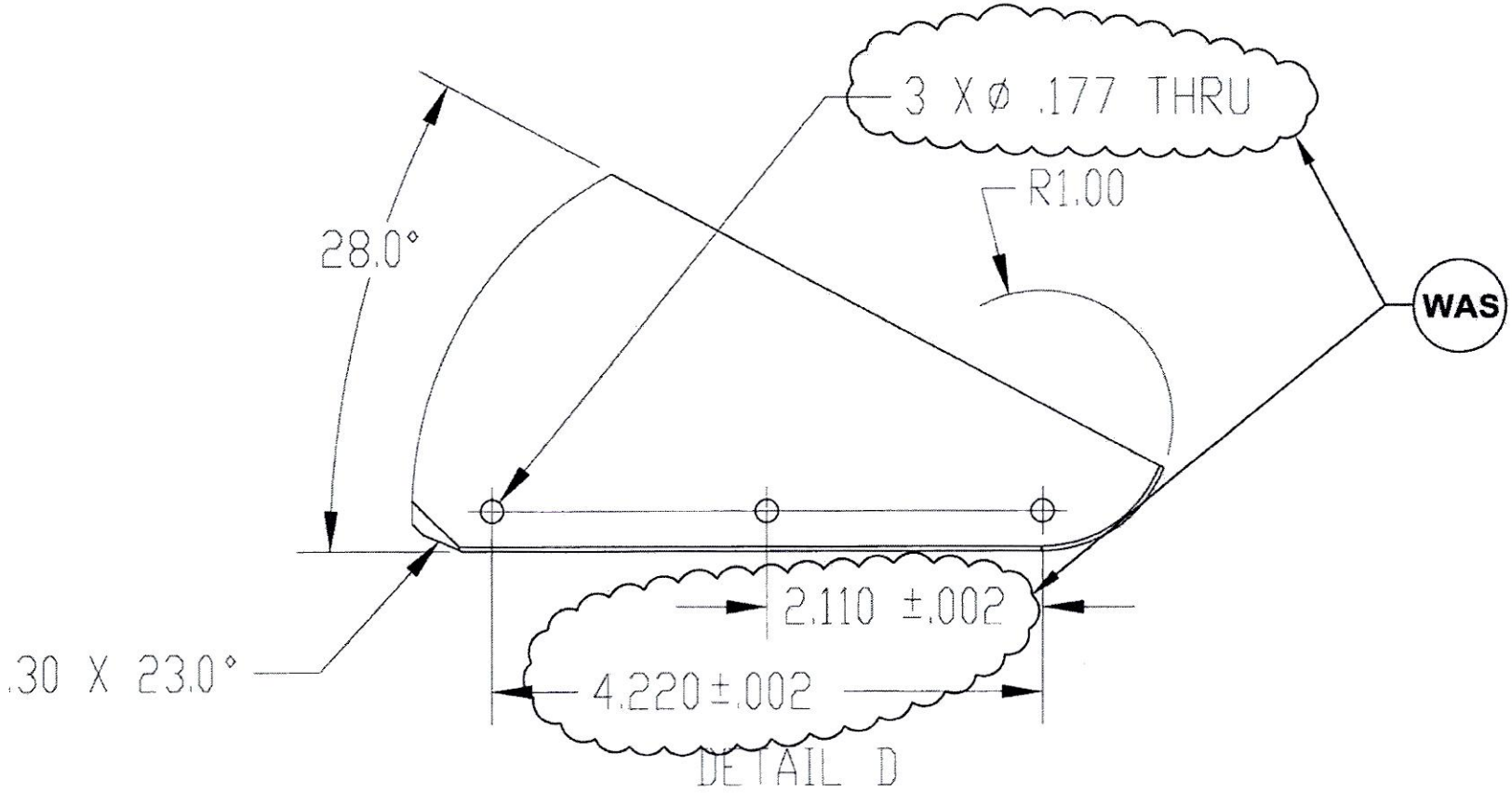

THE INFORMATION CONTAINED IN THIS DRAWING IS THE SOLE PROPERTY OF APICAL INDUSTRIES. ANY REPRODUCTION IN PART OR WHOLE WITHOUT THE WRITTEN PERMISSION OF APICAL INDUSTRIES IS PROHIBITED.

REVISIONS			
REV.	DESCRIPTION	DATE	APPROVED
N/C	INITIAL RELEASE	04/23/09	P. BRAVO
A	INCORPORATED ECN 03828	03/19/10	P. BRAVO

NOTES:

1. MATERIAL: 7075-T6 ALUMINUM PER AMS-QQ-A-225/9
2. FINISH: HARD ANODIZE IAW MIL-A-8625 TYPE III CLASS 2, COLOR BLACK; CARDINAL 4860-50 PRETREATMENT PRIMER: PRIME IAW MIL-P-23377J TYPE I CLASS N; 1-2 MIL MAX
3. DEBURR AND BREAK ALL SHARP EDGES
4. IDENTIFY IAW MPP-120

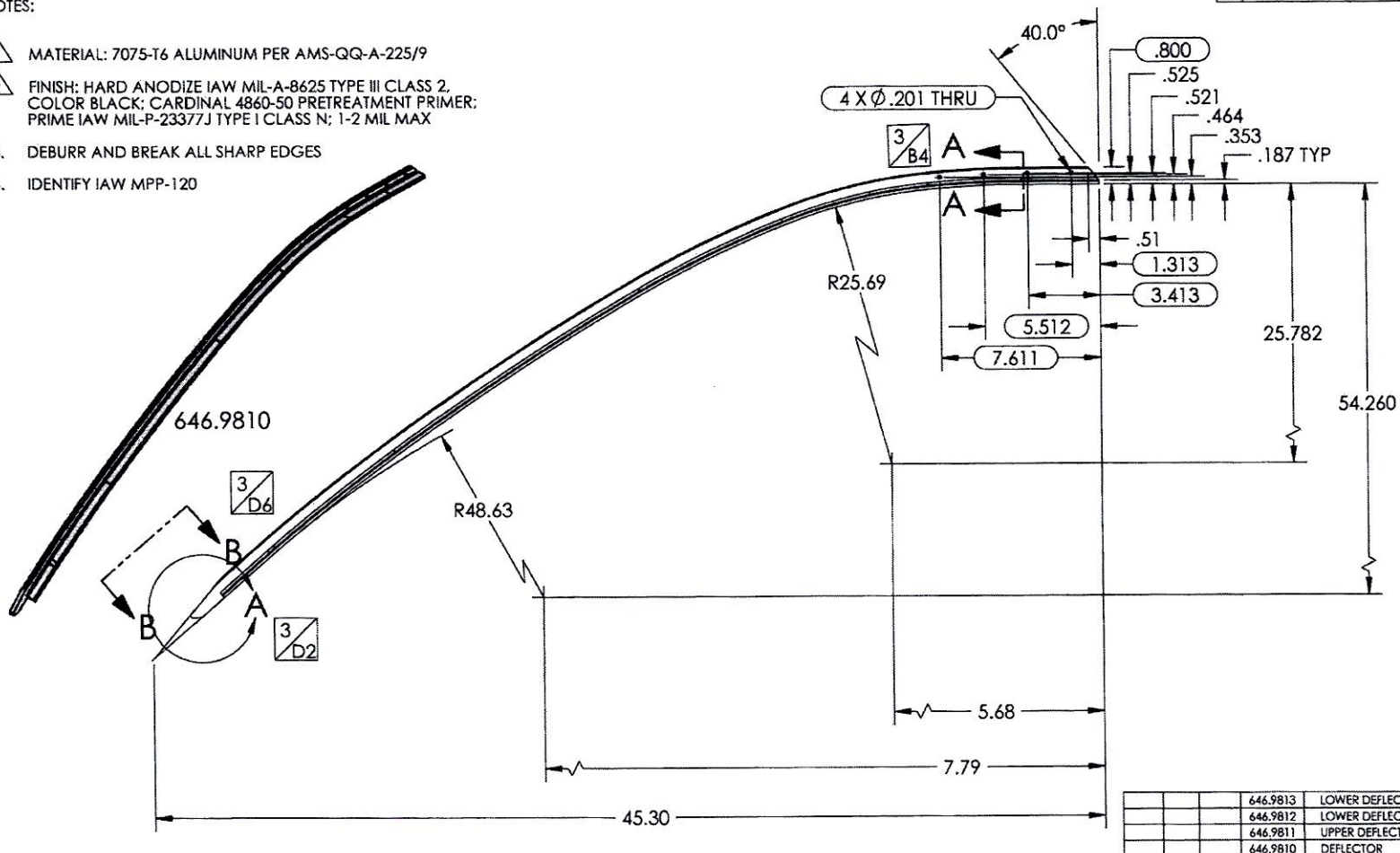

FIND #	PART NO.	DESCRIPTION	MAT'L	SPEC
	646.9813	LOWER DEFLECTOR LOW	⚠	⚠
	646.9812	LOWER DEFLECTOR HIGH	⚠	⚠
	646.9811	UPPER DEFLECTOR	⚠	⚠
	646.9810	DEFLECTOR	⚠	⚠

QTY — PARTS LIST

NEXT ASSY (S): 646.9500

ORIGINAL DATE (MO-DA-YR): 04-23-09
DRAWN BY: J. JACKSON
CHECKER: P. BRAVO
DRAWING APPROVAL: P. BRAVO 04-23-09
CONTRACT NO.:

UNLESS OTHERWISE SPECIFIED DIMENSIONS ARE IN INCHES
TOLERANCES ARE:
2 PLACE DECIMALS ±.02
3 PLACE DECIMALS ±.010
ANGLES ± .5°

APICAL INDUSTRIES
2608 TEMPLE HEIGHTS DR.
OCEANSIDE, CA. 92056-3512 (760)724-5300

DEFLECTOR

SIZE: B | CAGE CODE: 07M26 | DWG. NO.: 646.9800 | REV.: A

SCALE: NONE | SHEET: 1 OF 6

THE INFORMATION CONTAINED IN THIS DRAWING IS THE SOLE PROPERTY OF APICAL INDUSTRIES ANY REPRODUCTION IN PART OR WHOLE WITHOUT THE WRITTEN PERMISSION OF APICAL INDUSTRIES IS PROHIBITED.

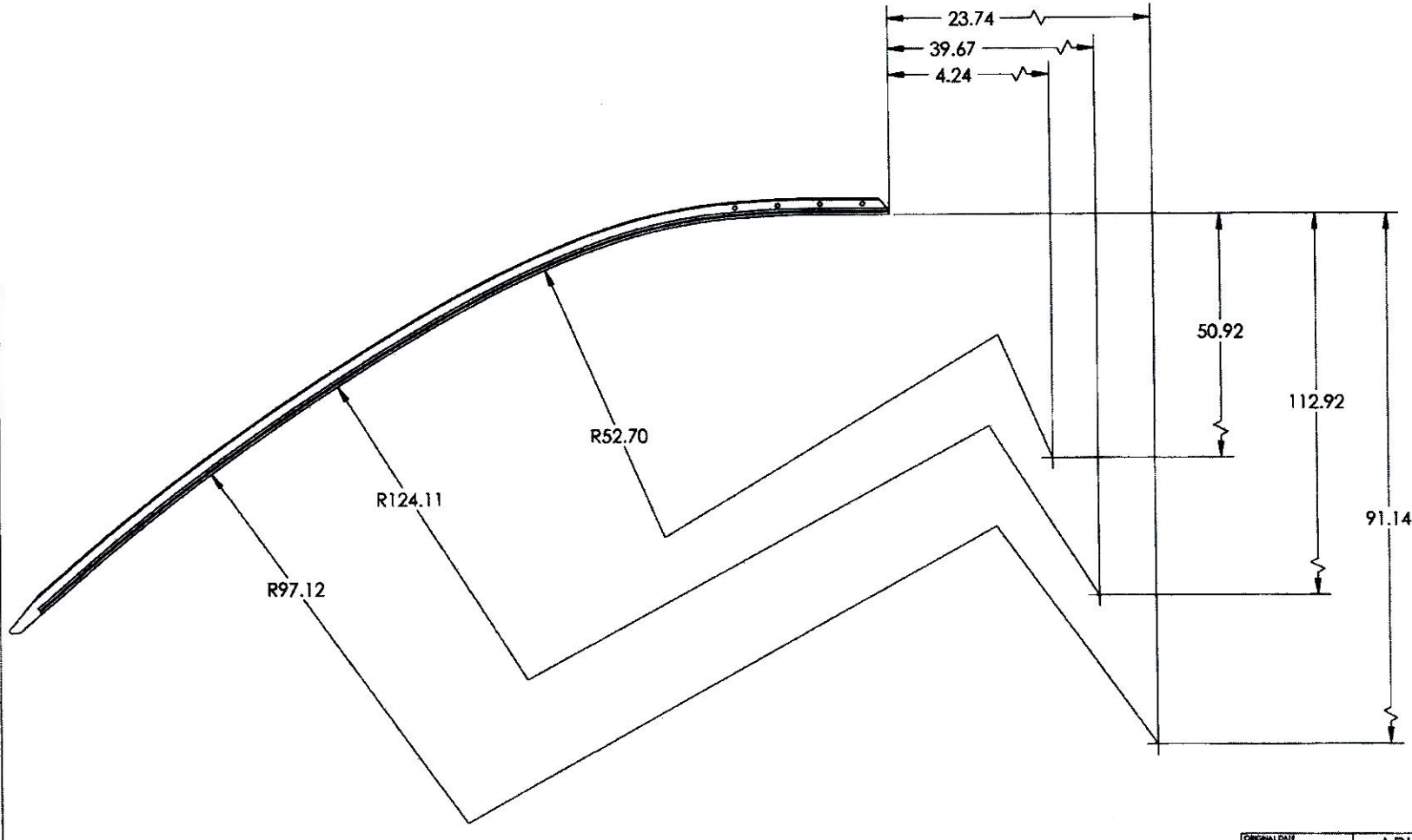

ORIGINAL DATE (MO-DA-YR)	04-22-09
DRAWN BY	CHECKED
J. JACKSON	P. BRAVO
DRAWING APPROVAL P. BRAVO 04-22-09	
CONTRACT No.	
UNLESS OTHERWISE SPECIFIED DIMENSIONS ARE IN INCHES TOLERANCES ARE: 2 PLACE DECIMALS ± .03 3 PLACE DECIMALS ± .010 ANGLES ± .5°	

APICAL INDUSTRIES
2608 TEMPLE HEIGHTS DR.
OCEANSIDE, CA. 92056-3512 (760)724-5300

DEFLECTOR

SIZE	CAGE CODE	DWG NO	REV.
B	07M26	646.9800	A

SCALE NONE SHEET 2 OF 4

THE INFORMATION CONTAINED IN THIS DRAWING IS THE SOLE PROPERTY OF APICAL INDUSTRIES. ANY REPRODUCTION IN PART OR WHOLE WITHOUT THE WRITTEN PERMISSION OF APICAL INDUSTRIES IS PROHIBITED.

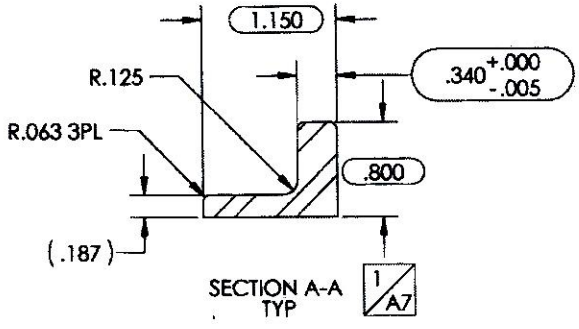

SECTION A-A
TYP
1/A7

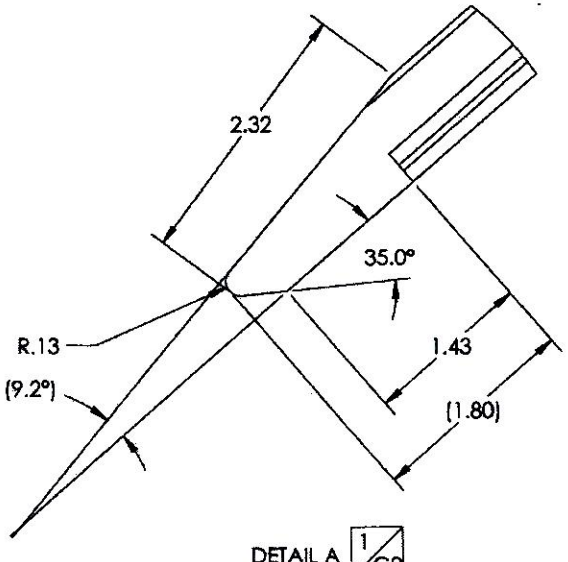

DETAIL A 1/C2

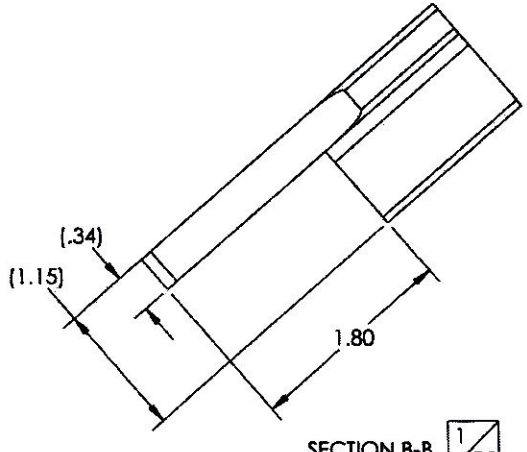

SECTION B-B 1/C2

ORIGINAL DATE (MO-DA-YR)	04-22-09
DRAWN BY	CHECKED
J. JACKSON	P. BRAYO
DRAWING APPROVAL P. BRAYO	
CONTRACT No.	
UNLESS OTHERWISE SPECIFIED DIMENSIONS ARE IN INCHES TOLERANCES ARE: 2 PLACE DECIMALS ±.01 3 PLACE DECIMALS ±.010 ANGLES ± .5°	

APICAL INDUSTRIES
2608 TEMPLE HEIGHTS DR.
OCEANSIDE, CA. 92056-3512 (760)724-5300

DEFLECTOR

SIZE	CAGE CODE	DWG NO	REV
B	07MZ6	646.9800	A

SCALE: NONE SHEET 3 OF 6

THE INFORMATION CONTAINED IN THIS DRAWING IS THE SOLE PROPERTY OF APICAL INDUSTRIES ANY REPRODUCTION IN PART OR WHOLE WITHOUT THE WRITTEN PERMISSION OF APICAL INDUSTRIES IS PROHIBITED.

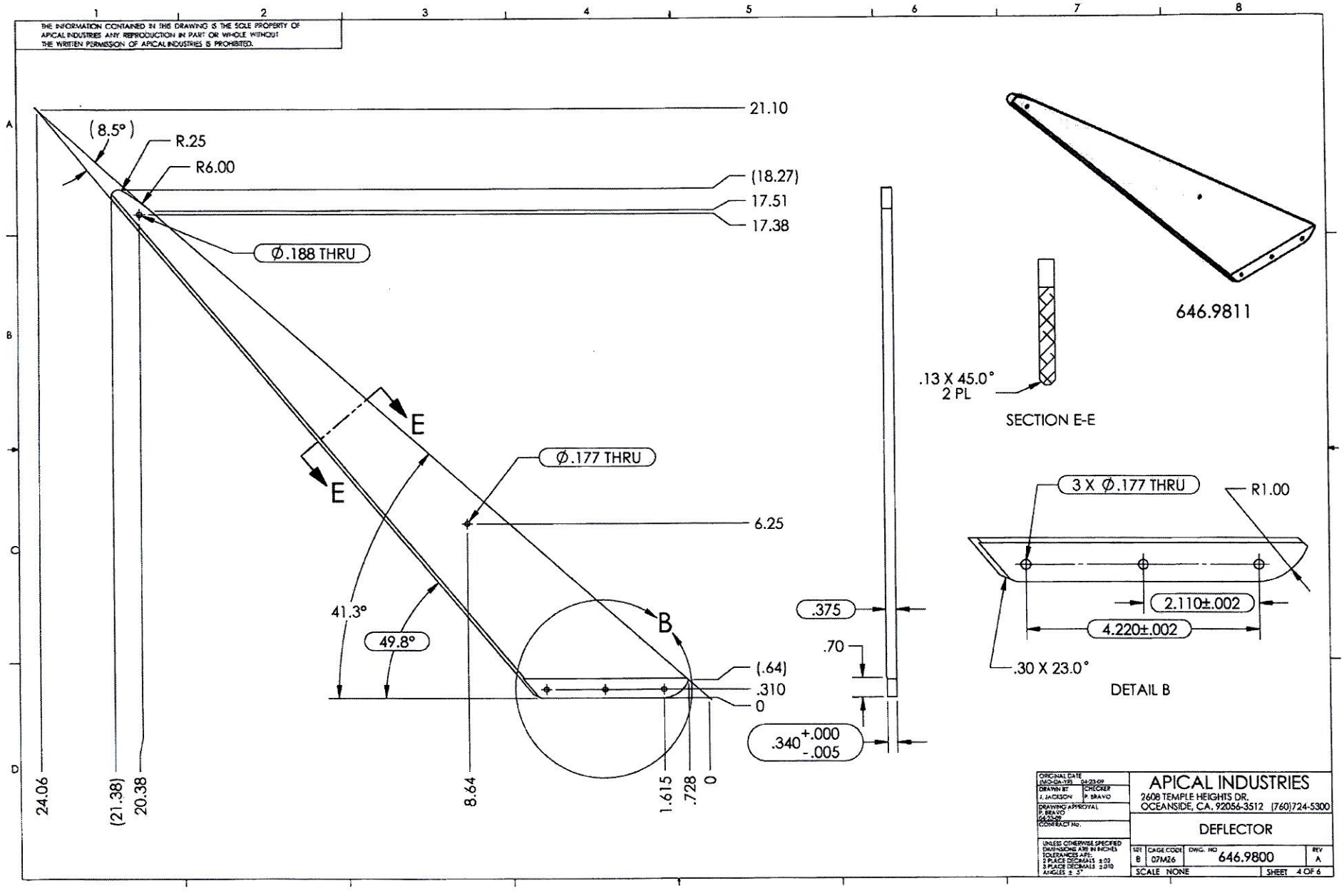

ORIGINAL DATE (MO-DA-YR) 04-23-09	APICAL INDUSTRIES		
DRAWN BY J. JACKSON	CHECKER P. BRAVO	2608 TEMPLE HEIGHTS DR. OCEANSIDE, CA. 92056-3512 (760)724-5300	
DRAWING APPROVAL P. BRAVO 04-23-09		DEFLECTOR	
CONTRACT No.			
UNLESS OTHERWISE SPECIFIED DIMENSIONS ARE IN INCHES TOLERANCES ARE: 2 PLACE DECIMALS ±.03 3 PLACE DECIMALS ±.010 ANGLES ± .5°	SIZE B	CAGE CODE 07MZ6	DWG. NO 646.9800 REV A
	SCALE NONE		SHEET 4 OF 6

THE INFORMATION CONTAINED IN THIS DRAWING IS THE SOLE PROPERTY OF APICAL INDUSTRIES ANY REPRODUCTION IN PART OR WHOLE WITHOUT THE WRITTEN PERMISSION OF APICAL INDUSTRIES IS PROHIBITED.

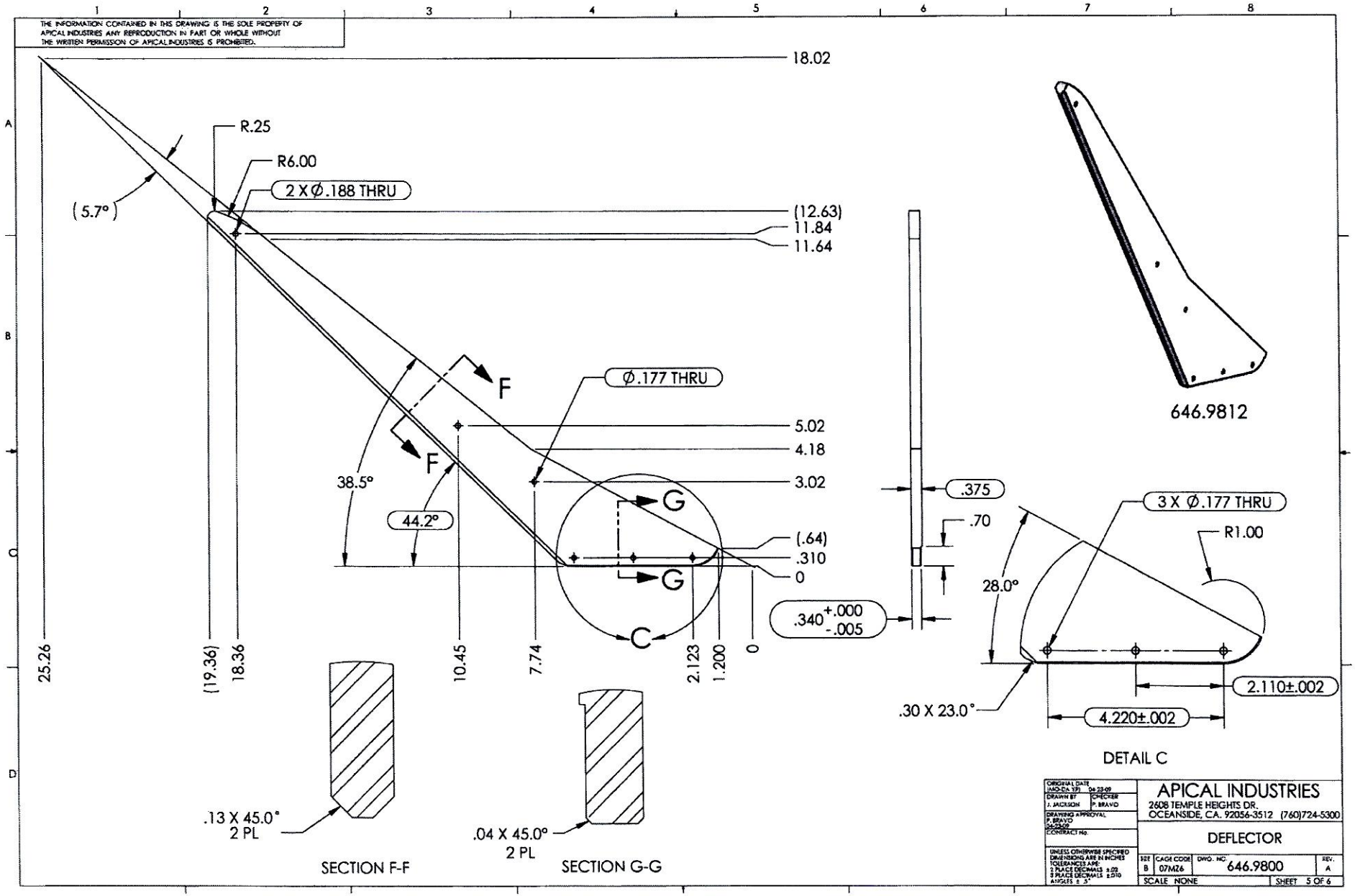

ORIGINAL DATE (MO-DA-YR)	04-22-09
DRAWN BY	J. JACKSON
CHECKER	P. BRAVO
DRAWING APPROVAL	P. BRAVO 04-22-09
CONTRACT NO.	
UNLESS OTHERWISE SPECIFIED DIMENSIONING ARE IN INCHES TOLERANCES ARE: 2 PLACE DECIMALS ±.02 3 PLACE DECIMALS ±.010 ANGLES ± .5°	

APICAL INDUSTRIES
2608 TEMPLE HEIGHTS DR.
OCEANSIDE, CA. 92056-3512 (760)724-5300

DEFLECTOR

SIZE	CAGE CODE	DWG. NO.	REV.
B	07MZ6	646.9800	A

SCALE NONE SHEET 5 OF 6

THE INFORMATION CONTAINED IN THIS DRAWING IS THE SOLE PROPERTY OF APICAL INDUSTRIES. ANY REPRODUCTION IN PART OR WHOLE WITHOUT THE WRITTEN PERMISSION OF APICAL INDUSTRIES IS PROHIBITED.

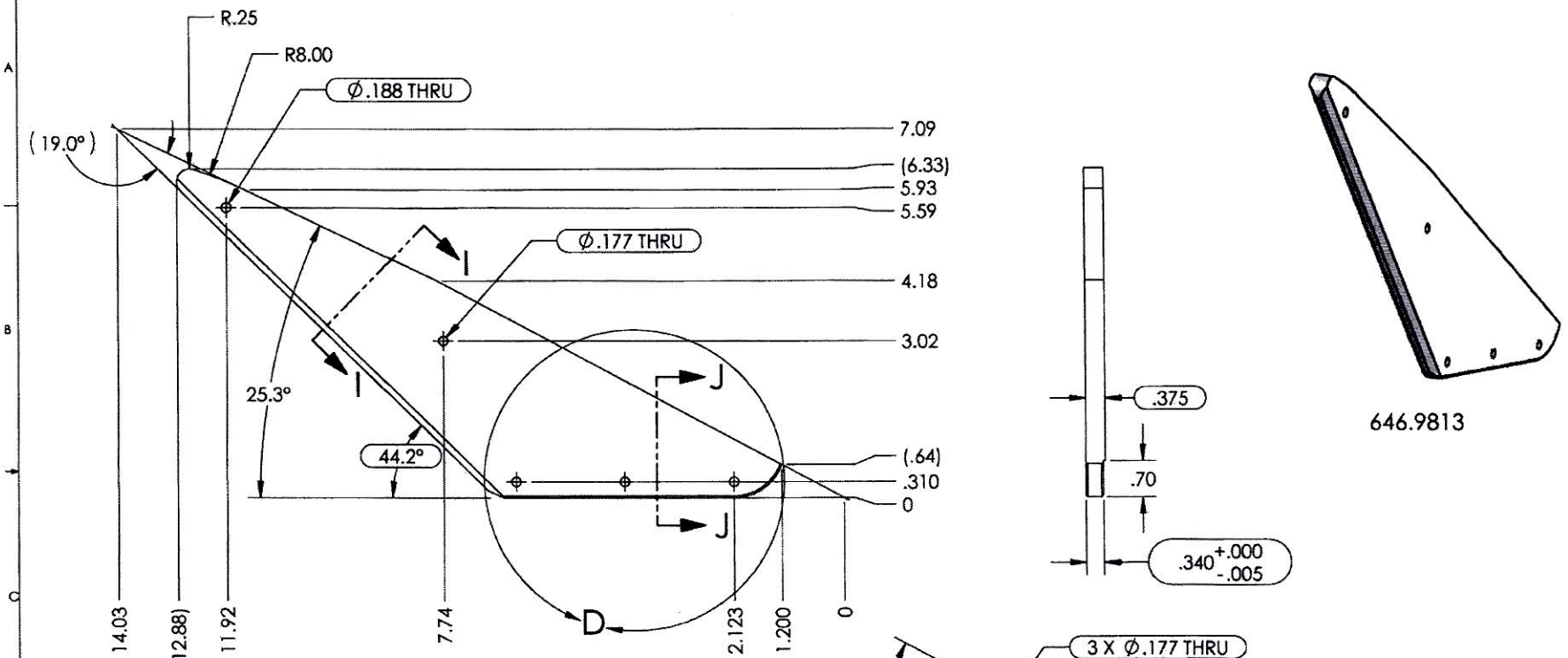

646.9813

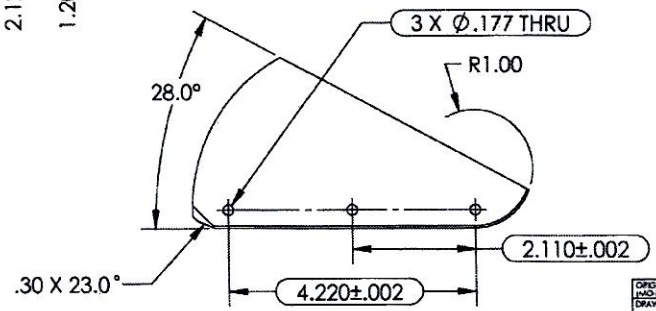

DETAIL D

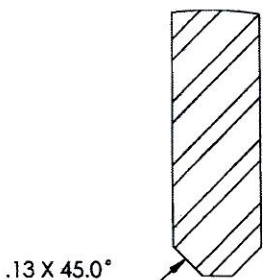

SECTION I-I

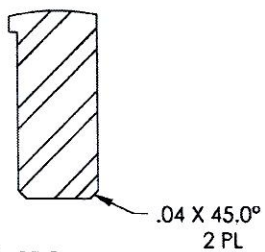

SECTION J-J

ORIGINAL DATE: (MO-DA-YR) 04-23-09
DRAWN BY: J. JACKSON
CHECKER: P. BRAVO
DRAWING APPROVAL: P. BRAVO 04-25-09
CONTRACT No.

UNLESS OTHERWISE SPECIFIED DIMENSIONS ARE IN INCHES
TOLERANCES ARE:
2 PLACE DECIMALS ±.02
3 PLACE DECIMALS ±.010
ANGLES ± .5°

APICAL INDUSTRIES
2608 TEMPLE HEIGHTS DR.
OCEANSIDE, CA. 92056-3512 (760)724-5300

DEFLECTOR

SIZE	CAGE CODE	DWG. NO	REV.
B	07MZ6	646.9800	A

SCALE NONE | SHEET 6 OF 6

Dart Aerospace Ltd.
1270 Aberdeen Street
Hawkesbury, ON K6A 1K7
Tel: 613 632 9577
Fax: 613 632 1053

PURCHASE ORDER

Purchase Order ID PO34302

Purchase Order Date 11/14/2016
PO Print Date 11/25/2016

Order From : VC-ATG001

A.T.G. INDUSTRIES INC.
731 INDUSTRIELLE ROAD
ROCKLAND, ON K4K 1T2
CANADA

Ship To : DART AEROSPACE LTD

1270 ABERDEEN
HAWKESBURY, ON K6A 1K7
CANADA

Contact Name
Vendor Phone 613-446-4544
Ship To Contact
Ship To Phone
Ship Via: VENDOR'S TRUCK
Ship Acct:

Buyer Chantal Lavoie
Customer POID
Customer Tax # 10127-2607
Terms Net 30
Currency CAD
FOB FCA – (Free Carrier)

3	151673	646.3310 LH HALF UPPER CUTTER REV. N/C	11/30/2016	8.00		$18.10	$144.80
			Yes				
			11/30/2016				

FINISH: HARD BLACK ANODIZE AS PER IAW MIL-A-8625 TYPE III, CLASS 2 / PRIME AS PER IAW MIL-P-23377J TYPE 1 CLASS N

Line Total: **$144.80**

4	151644	646.3812 GUSSET BRACKET REV. N/C	11/30/2016	10.00		$6.10	$61.00
			Yes				
			11/30/2016				

FINISH: HARD BLACK ANODIZE AS PER IAW MIL-A-8625 TYPE III, CLASS 2 / PRIME AS PER IAW MIL-P-23377J TYPE 1 CLASS N

Line Total: **$61.00**

5	151658	646.9810 DEFLECTOR REV. A	11/30/2016	6.00		$47.25	$283.50
			Yes				
			11/30/2016				

FINISH: HARD BLACK ANODIZE AS PER IAW MIL-A-8625 TYPE III, CLASS 2 / PRIME AS PER IAW MIL-P-23377J TYPE 1 CLASS N

Note:

11/25/2016

A.T.G. INDUSTRIES INC.
731 INDUSTRIELLE STREET
ROCKLAND, ON K4K 1T2
Canada

Ph: (613) 446-4544 Fax: (613) 446-4556

Pack List

Number: 912614 Date: 30-Nov-16

To

Dart Aerospace Ltd
1270 Aberdeen St
Hawkesbury, ON K6A 1K7

Ph: 613 632-9577 Fax: 613 632-1053

Ship To

CHANTAL LAVOIE
Dart Aerospace Ltd
1270 Aberdeen St
Hawkesbury, ON K6A 1K7

Ph: 613 632-9577 Fax: 613 632-1053

Terms	Ship Via

Quantity	Description
	PLEASE REFERENCE THE PACK LIST NUMBER ON ALL CORRESPONDENCE TO THIS SHIPMENT. IF YOU HAVE ANY QUESTIONS, PLEASE CALL AT (613) 446-4544.
20 ea	Part: 646.3010 Rev: N/C LH Half Hard Anodize, Type III, Class 2 (MIL-A-8625) Primer, MIL-P-23377J, TYPE 1, CLASS N Job: 20428 PO: 34302 Line: 1
4 ea	Part: 646.3312 Rev: N/C Center plate Hard Anodize, Type III, Class 2 (MIL-A-8625) Primer, MIL-P-23377J, TYPE 1, CLASS N Job: 20429 PO: 34302 Line: 2
8 ea	Part: 646.3310 Rev: N/C LH half upper cutter Hard Anodize, Type III, Class 2 (MIL-A-8625) Primer, MIL-P-23377J, TYPE 1, CLASS N Job: 20430 PO: 34302 Line: 3
10 ea	Part: 646.3812 Rev: N/C Gusset bracket Hard Anodize, Type III, Class 2 (MIL-A-8625) Primer, MIL-P-23377J, TYPE 1, CLASS N Job: 20431 PO: 34302 Line: 4
6 ea	Part: 646.9810 Rev: A Deflector Hard Anodize, Type III, Class 2 (MIL-A-8625) Primer, MIL-P-23377J, TYPE 1, CLASS N Job: 20432 PO: 34302 Line: 5
1	Part: ADMINISTRATION FEE Rev: N/A

$16-12-7

A.T.G. INDUSTRIES INC.
731 INDUSTRIELLE STREET
ROCKLAND, ON K4K 1T2
Canada

Ph: (613) 446-4544 Fax: (613) 446-4556

Pack List

Number: 912614 Date: 30-Nov-16

To

Dart Aerospace Ltd
1270 Aberdeen St
Hawkesbury, ON K6A 1K7

Ph: 613 632-9577 Fax: 613 632-1053

Ship To

CHANTAL LAVOIE
Dart Aerospace Ltd
1270 Aberdeen St
Hawkesbury, ON K6A 1K7

Ph: 613 632-9577 Fax: 613 632-1053

Terms	Ship Via

Quantity	Description
ea	ADMINISTRATION FEE Job: 20433 PO: 34302 Line: 6

DATE : 30/11/16

CERTIFIED SIGNATURE :

RECEIVER SIGNATURE : 30/16-12-1

Note: This Packing Slip may contain parts that have been PLATED. Items that are plated may be subject to natural tarnishing and it is suggested that they be inspected within 24 hours of receipt.

CERTIFICATE OF CONFORMANCE

A.T.G. INDUSTRIES INC. CERTIFIES THAT ALL ITEMS IN THIS SHIPMENT CONFORM TO REQUIREMENTS.

MADE IN CANADA.